ALLEGRA
INOX

DESIGNED AND TESTED ACCORDING TO EUROPEAN STANDARD **UNI EN 12209:2016**

SECURITY

Self-centering tipping dead bolt with lock-picking system

Versions available with Euro profile cylinder and cross cylinder

MATERIALS

Stainless steel forend, rods and springs

Closed 19 mm zinc and plated steel lock case to stop profile machining chips from entering the mechanism

EASY TO TURN

Adjustable anti-noise latch bolt ~ 5 mm and roller bolt interchangeable with plug

Roller bolt cod. 01435 - Plug cod. 01431

TOP SECURITY

Additional locking points
gear mechanism movement, steel gears

25 mm longer rods projection to allow a better fitting of the rods in the profile,
ensuring a safer and more effective locking

M8 AND FAST DEVICE

Two rods versions available:
Internal rods with m8 screw and
fast device for the new fast click rods

TOP FLEXIBILITY

Locks for iron profiles with top and bottom lockings are also available without faceplate, to be installed inside the profile; backset from 20 mm

Locking operated by the cylinder or by the handle.

DEAD AND ADJUSTABLE LATCH BOLT 3 LOCKING POINTS

PROVIDED WITH M8 DEVICES OR FAST CONNECTION DEVICES

Latch bolt interchangeable with roller bolt cod. 01435

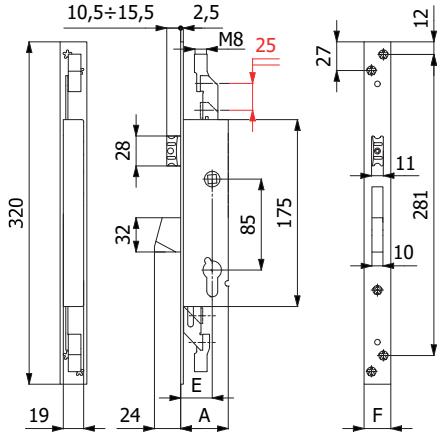

CONSTRUCTIVE FEATURES:

Zinc and plastic plated steel case and cover - Stainless steel forend - Nickel-plated special alloy self-centering dead bolt with lock-picking system - Nickel-plated special alloy anti-noise latch bolt - Zinc-plated special alloy square spindle device ⌀ 8 mm.

WORKING:

Key driven dead bolt - Handle or key driven latch bolt.

HAND:

Reversible.

PROVIDED WITH:

Fixing screws

For locks 1490: 1 rose cod. 0120 N, cylinder screw.
For locks 4490: Cross key cylinder cod. 4052, 3 keys, 2 roses cod. 0441 N

PACKAGING:

Single cellophane pack.

COD.	E	F	A	Throws	Cylinder	Key	kg		
1490.25.25.M8.E	25	25	40	1		-	0,64	-	30
1490.30.25.M8.E	30	25	45	1			0,66	-	30
1490.35.25.M8.E	35	25	50	1			0,69	-	30
1490..25.AR.E**	VERSION WITH FAST CONNECTION FOR RODS COD. 067AR								
4490.25.25.M8.E	25	25	40	1	cod. 4052	cod. 4100	0,72	-	30
4490.30.25.M8.E	30	25	45	1			0,74	-	30
4490.35.25.M8.E	35	25	50	1			0,77	-	30
4490..25.AR.E**	VERSION WITH FAST CONNECTION FOR RODS COD. 067AR								

DEAD BOLT 3 LOCKING POINTS

PROVIDED WITH M8 DEVICES OR FAST CONNECTION DEVICES

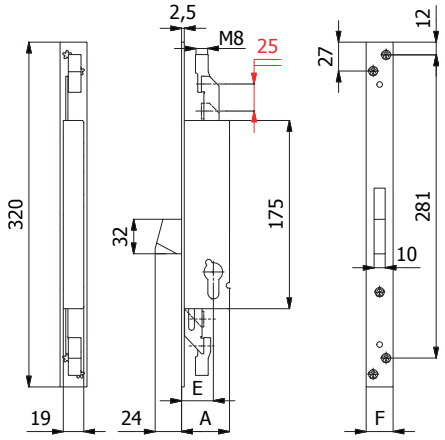

CONSTRUCTIVE FEATURES:

Zinc and plastic plated steel case and cover - Stainless steel forend - Nickel-plated special alloy self-centering dead bolt with lock-picking system.

WORKING:

Key driven dead bolt .

HAND:

No hand.

PROVIDED WITH:

Fixing screws

For locks 1491: 1 rose cod. 0120 N, cylinder screw.
For locks 4491: Cross key cylinder cod. 4052, 3 keys, 2 roses cod. 0441 N.

PACKAGING:

Single cellophane pack.

COD.	E	F	A	Throws	Cylinder	Key	kg		
1491.25.25.M8.E	25	25	40	1		-	0,58	-	30
1491.30.25.M8.E	30	25	45	1			0,60	-	30
1491.35.25.M8.E	35	25	50	1			0,63	-	30
1491.**.25.AR.E	VERSION WITH FAST CONNECTION FOR RODS COD. 067AR								
4491.25.25.M8.E	25	25	40	1	cod. 4052	cod. 4100	0,66	-	30
4491.30.25.M8.E	30	25	45	1			0,68	-	30
4491.35.25.M8.E	35	25	50	1			0,71	-	30
4491.**.25.AR.E	VERSION WITH FAST CONNECTION FOR RODS COD. 067AR								

DEAD AND ADJUSTABLE ROLLER BOLT 3 LOCKING POINTS

PROVIDED WITH M8 DEVICES OR FAST CONNECTION DEVICES

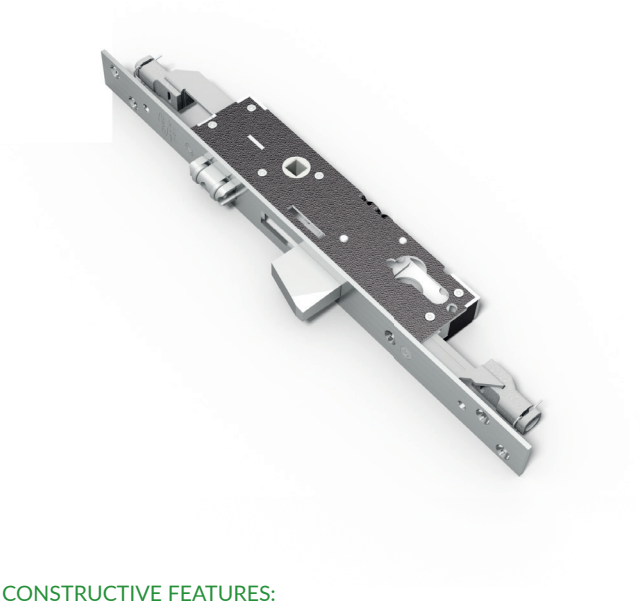

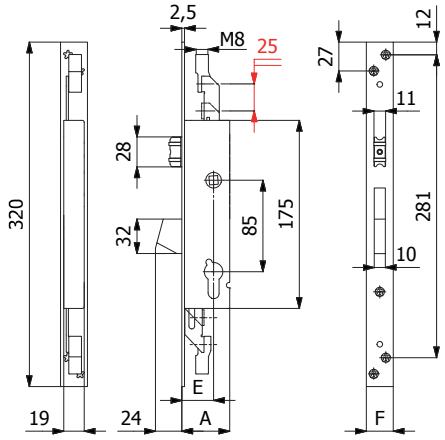

CONSTRUCTIVE FEATURES:

Zinc and plastic plated steel case and cover - Stainless steel forend - Nickel-plated special alloy self-centering dead bolt with lock-picking system - Nickel-plated brass roller bolt.

WORKING:

Key driven dead bolt - Pressure or key driven roller bolt.

HAND:

No hand.

PROVIDED WITH:

Fixing screws

For locks 1495: 1 rose cod. 0120 N, cylinder screw.
For locks 4495: Cross key cylinder cod. 4052, 3 keys, 2 roses cod. 0441 N.

PACKAGING:

Single cellophane pack.

COD.	E	F	A	Throws	Cylinder	Key	kg		
1495.25.25.M8.E	25	25	40	1		-	0,64	-	30
1495.30.25.M8.E	30	25	45	1			0,66	-	30
1495.35.25.M8.E	35	25	50	1			0,69	-	30
1495.**.25.AR.E	VERSION WITH FAST CONNECTION FOR RODS COD. 067AR								
4495.25.25.M8.E	25	25	40	1	cod. 4052	cod. 4100	0,72	-	30
4495.30.25.M8.E	30	25	45	1			0,74	-	30
4495.35.25.M8.E	35	25	50	1			0,77	-	30
4495.**.25.AR.E	VERSION WITH FAST CONNECTION FOR RODS COD. 067AR								

HOOK BOLT 3 LOCKING POINTS

PROVIDED WITH M8 DEVICES OR FAST CONNECTION DEVICES

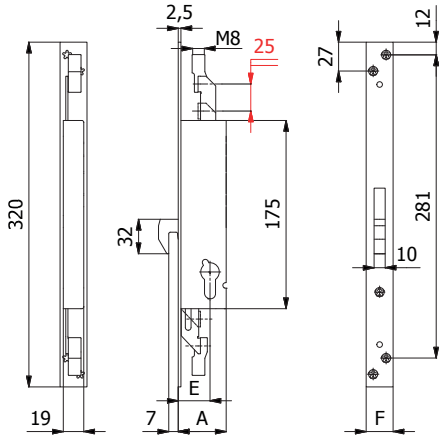

CONSTRUCTIVE FEATURES:

Zinc and plastic plated steel case and cover - Stainless steel forend - Stainless steel hook bolt.

WORKING:

Key driven hook bolt.

HAND:

No hand.

PROVIDED WITH:

Fixing screws

For locks 1496: 1 rose cod. 0120 N, cylinder screw.

For locks 4496: Cross key cylinder cod. 4052, 3 keys, 2 roses cod. 0441 N.

PACKAGING:

Single cellophane pack.

COD.	E	F	A	Throws	Cylinder	Key	kg		
1496.25.25.M8.E	25	25	40	1		-	0,61	-	30
1496.30.25.M8.E	30	25	45	1			0,64	-	30
1496.35.25.M8.E	35	25	50	1			0,65	-	30
1496.**.25.AR.E	VERSION WITH FAST CONNECTION FOR RODS COD. 067AR								
4496.25.25.M8.E	25	25	40	1	cod. 4052	cod. 4100	0,69	-	30
4496.30.25.M8.E	30	25	45	1			0,72	-	30
4496.35.25.M8.E	35	25	50	1			0,73	-	30
4496.**.25.AR.E	VERSION WITH FAST CONNECTION FOR RODS COD. 067AR								

TOP AND BOTTOM 2 LOCKING POINTS
PROVIDED WITH M8 DEVICES OR FAST CONNECTION DEVICES

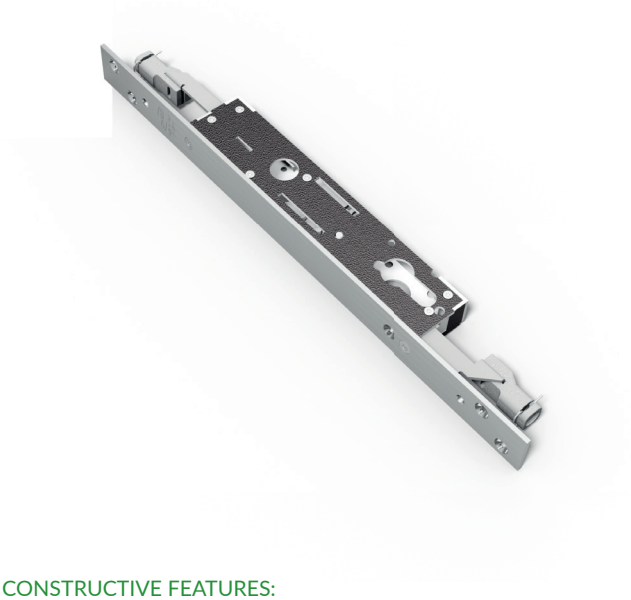

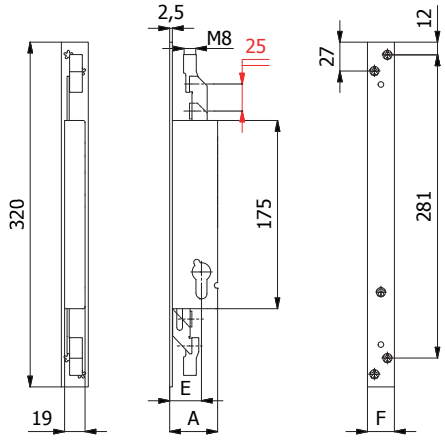

CONSTRUCTIVE FEATURES:
Zinc and plastic plated steel case and cover - Stainless steel forend.

WORKING:
Key driven vertical rods.

HAND:
No hand.

PROVIDED WITH:
Fixing screws

For locks 1492: 1 rose cod. 0120 N, cylinder screw.
For locks 4492: Cross key cylinder cod. 4052, 3 keys, 2 roses cod. 0441 N.

PACKAGING:
Single cellophane pack.

COD.	E	F	A	Throws	Cylinder	Key	kg		
1492.23.25.M8.E	22,5	25	37	1			0,57	-	30
1492.25.25.M8.E	25	25	40	1		-	0,58	-	30
1492.30.25.M8.E	30	25	45	1			0,60	-	30
1492.35.25.M8.E	35	25	50	1			0,63	-	30
1492.**.25.AR.E	VERSION WITH FAST CONNECTION FOR RODS COD. 067AR								
4492.23.25.M8.E	22,5	25	37	1			0,65	-	30
4492.25.25.M8.E	25	25	40	1	cod. 4052	cod. 4100	0,66	-	30
4492.30.25.M8.E	30	25	45	1			0,68	-	30
4492.35.25.M8.E	35	25	50	1			0,71	-	30
4492.**.25.AR.E	VERSION WITH FAST CONNECTION FOR RODS COD. 067AR								

TOP AND BOTTOM 2 LOCKING POINTS WITHOUT FOREND

PROVIDED OR FAST CONNECTION DEVICES

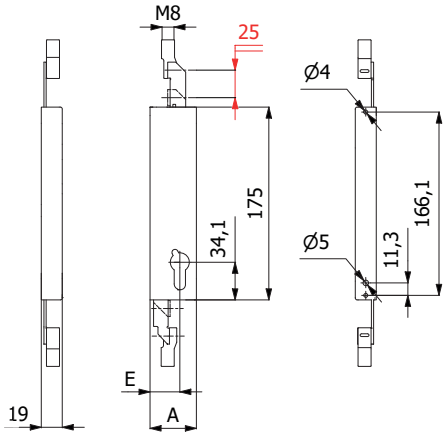

CONSTRUCTIVE FEATURES:

Zinc and plastic plated steel case and cover

WORKING:

Key driven vertical rods.

HAND:

No hand.

PROVIDED WITH:

1 rose cod. 0120 N, cylinder screw.

PACKAGING:

Single cellophane pack.

COD.	E	A	Throws	Cylinder	Key	kg		
1492.23.00.M8.E	20	35	1			0,42	-	30
1492.25.00.M8.E	22	37	1		-	0,43	-	30
1492.30.00.M8.E	27	42	1			0,45	-	30
1492.35.00.M8.E	32	47	1			0,48	-	30
1492.**.00.AR.E	VERSION WITH FAST CONNECTION FOR RODS COD. 067AR							
4492.23.00.M8.E	20	35	1			0,44	-	30
4492.25.00.M8.E	22	37	1	cod. 4052	cod. 4100	0,45	-	30
4492.30.00.M8.E	27	42	1			0,47	-	30
4492.35.00.M8.E	32	47	1			0,50	-	30
4492.**.00.AR.E	VERSION WITH FAST CONNECTION FOR RODS COD. 067AR							

DEAD BOLT WITH HANDLE 3 LOCKING POINTS

PROVIDED WITH M8 DEVICES OR FAST CONNECTION DEVICES

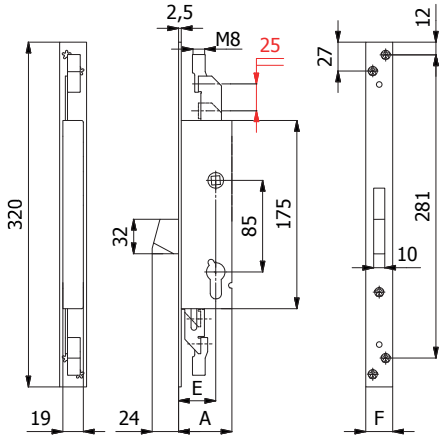

CONSTRUCTIVE FEATURES:

Zinc and plastic plated steel case and cover - Stainless steel forend - Nickel-plated special alloy self-centering dead bolt with lock-picking system - Zinc-plated special alloy square spindle device ⌀ 8 mm.

WORKING:

Handle driven dead bolt - Key driven handle interlock.

HAND:

No hand.

PROVIDED WITH:

Fixing screws, 1 rose cod. 0120 N, cylinder screw.

PACKAGING:

Single cellophane pack.

COD.	E	F	A	Throws	Cylinder	Key	kg		
1491Q.25.25.M8.E	25	25	40	1		-	0,68	-	30
1491Q.30.25.M8.E	30	25	45	1			0,71	-	30
1491Q.35.25.M8.E	35	25	50	1			0,74	-	30
1491Q..25.AR.E**	VERSION WITH FAST CONNECTION FOR RODS COD. 067AR								

HOOK BOLT WITH HANDLE 3 LOCKING POINTS

PROVIDED WITH M8 DEVICES OR FAST CONNECTION DEVICES

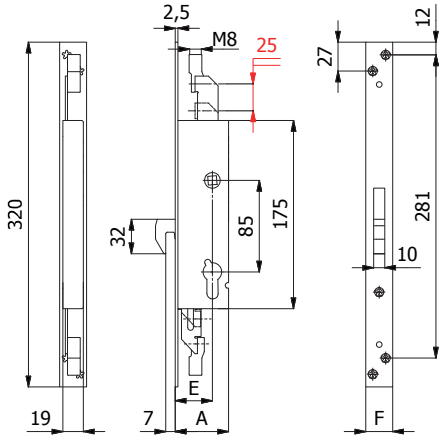

CONSTRUCTIVE FEATURES:

Zinc and plastic plated steel case and cover - Stainless steel forend - Stainless steel hook bolt - Zinc-plated special alloy square spindle device ⌀ 8 mm.

WORKING:

Handle driven hook bolt - Key driven handle interlock.

HAND:

No hand.

PROVIDED WITH:

Fixing screws

For locks 1496Q: 1 rose cod. 0120 N, cylinder screw.
For locks 4496Q: Cross key cylinder cod. 4052, 3 keys, 2 roses cod. 0441 N.

PACKAGING:

Single cellophane pack.

COD.	E	F	A	Throws	Cylinder	Key	kg		
1496Q.25.25.M8.E	25	25	40	1		-	0,71	-	30
1496Q.30.25.M8.E	30	25	45	1			0,74	-	30
1496Q.35.25.M8.E	35	25	50	1			0,75	-	30
1496Q..25.AR.E**	VERSION WITH FAST CONNECTION FOR RODS COD. 067AR								

TOP AND BOTTOM WITH HANDLE 2 LOCKING POINTS

PROVIDED WITH M8 DEVICES OR FAST CONNECTION DEVICES

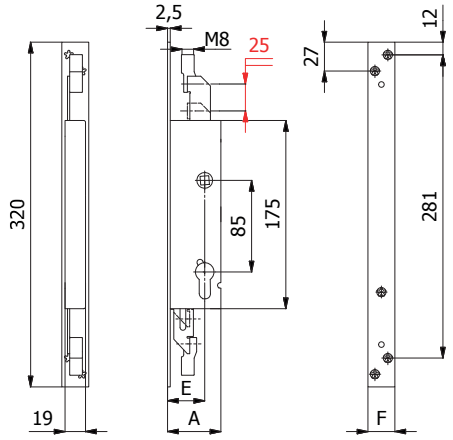

CONSTRUCTIVE FEATURES:

Zinc and plastic plated steel case and cover - Stainless steel forend - Zinc-plated special alloy square spindle device ⌑ 8 mm.

WORKING:

Handle driven vertical rods - Key driven handle interlock.

HAND:

No hand.

PROVIDED WITH:

Fixing screws

For locks 1492Q: 1 rose cod. 0120 N, cylinder screw.
For locks 4492Q: Cross key cylinder cod. 4052, 3 keys, 2 roses cod. 0441 N.

PACKAGING:

Single cellophane pack.

COD.	E	F	A	Throws	Cylinder	Key	kg		
1492Q.25.25.M8.E	25	25	40	1		-	0,59	-	30
1492Q.30.25.M8.E	30	25	45	1			0,62	-	30
1492Q.35.25.M8.E	35	25	50	1			0,64	-	30
1492Q..25.AR.E**	VERSION WITH FAST CONNECTION FOR RODS COD. 067AR								

LOCKS AVAILABLE WITHOUT FACEPLATE UPON REQUEST

HOOK BOLT WITH HANDLE 3 LOCKING POINTS

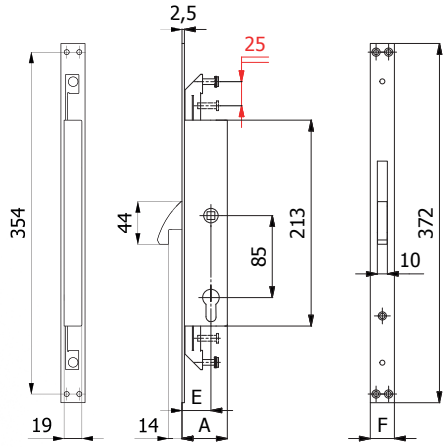

CONSTRUCTIVE FEATURES:

Zinc and plastic plated steel case and cover - Stainless steel forend - High resistance nickel-plated steel hook bolt - Burnished steel square spindle device ⌑ 8 mm.

WORKING:

Handle driven hook bolt - Key driven handle interlock.

HAND:

No hand.

PROVIDED WITH:

Stainless steel fixing screws.

For series 1473: 1 rose cod. 0120 N, cylinder screw.
For series 4473: Cross key cylinder cod. 4072, 3 keys, 2 roses cod. 0441 N.

COD.	E	F	A	Throws	Cylinder	Key	kg		
1473	30	25	47	1		-	0,80	-	1
4473	30	25	47	1	cod. 4072	cod. 4100	0,88	-	1

LOCKS AVAILABLE WITH M8 DEVICE AND/OR WITHOUT FACEPLATE UPON REQUEST

DESIGNED AND TESTED ACCORDING TO EUROPEAN STANDARD prEN 15685:2019

SECURITY

Self-centering tipping dead bolt with lock-picking system

Independent locking points: if one of the dead bolts is forced open, the others remain in closed position

Versions available with Euro profile cylinder and cross key cylinder

MATERIALS

Stainless steel forend, rods and springs

Closed 19 mm zinc and plated steel lock case to stop profile machining chips from entering the mechanism

EASY TO TURN

Adjustable anti-noise latch bolt ~ 5 mm and roller bolt interchangeable with plug

Roller bolt cod. 01435 - Plug cod. 01431

2 DEAD BOLTS

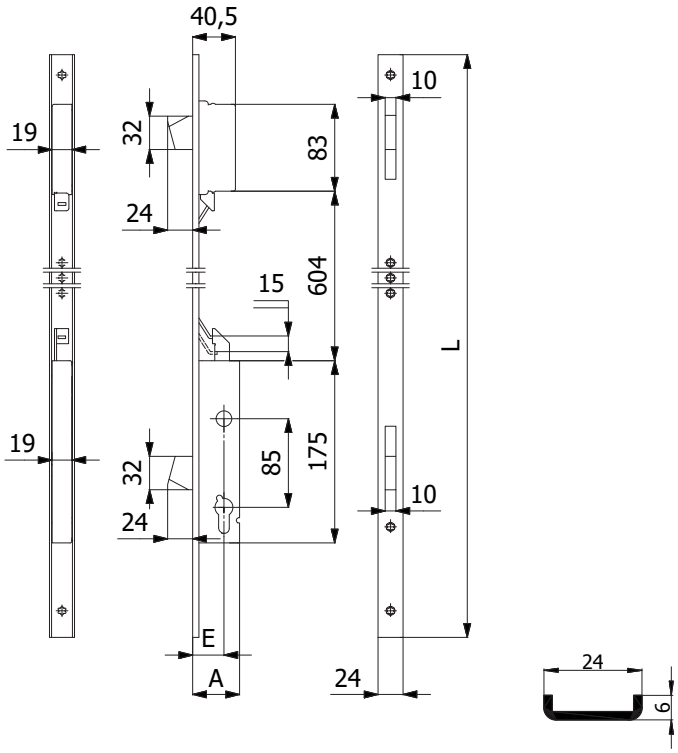

CONSTRUCTIVE FEATURES:

Zinc and plastic plated steel cases and covers - Nickel-plated special alloy self-centering dead bolts with lock-picking system.

WORKING:

Key driven dead bolts.

HAND:

No hand.

PROVIDED WITH:

2 roses cod. 0120 N, 2 forend spacers cod. 0633 N, cylinder screw, stainless steel fixing screws, assembling instructions.

COD.	E	L	A	Forend	Throws	kg		
1531.25.UC	25	1000	40	Stainless steel	1	1,10	-	5
1531.30.UC	30	1000	45		1	1,13	-	5
1531.35.UC	35	1000	50		1	1,16	-	5

2 DEAD BOLTS 4 LOCKING POINTS
PROVIDED WITH M8 DEVICES

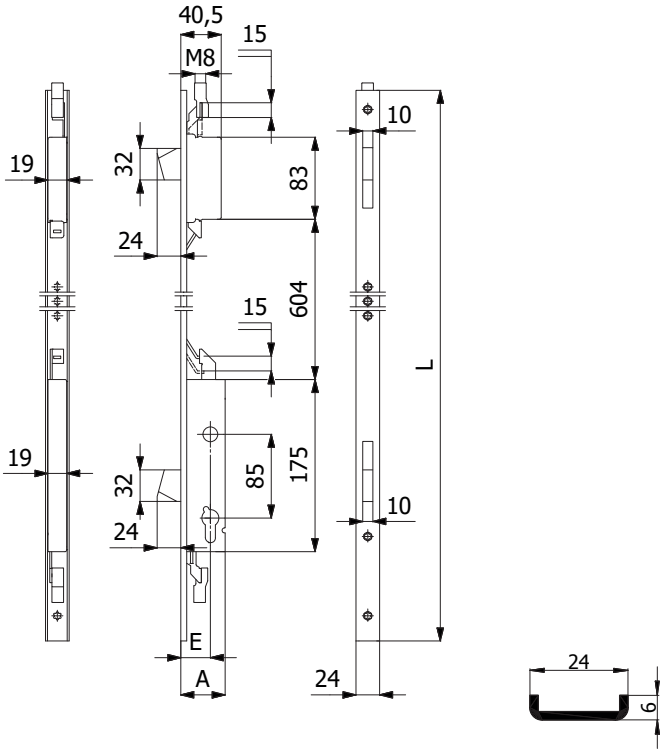

CONSTRUCTIVE FEATURES:
Zinc and plastic plated steel cases and covers - Nickel-plated special alloy self-centering dead bolts with lock-picking system.

WORKING:
Key driven dead bolts.

HAND:
No hand.

PROVIDED WITH:
2 roses cod. 0120 N, 2 forend spacers cod. 0633 N, cylinder screw, stainless steel fixing screws, assembling instructions.

COD.	E	L	A	Forend	Throws	kg		
1531.25.UC.M8	25	1000	40	Stainless steel	1	1,16	-	5
1531.30.UC.M8	30	1000	45		1	1,19	-	5
1531.35.UC.M8	35	1000	50		1	1,22	-	5

3 DEAD BOLTS 5 LOCKING POINTS

PROVIDED WITH M8 DEVICES AND REDUCED LOCKING POINTS DISTANCES

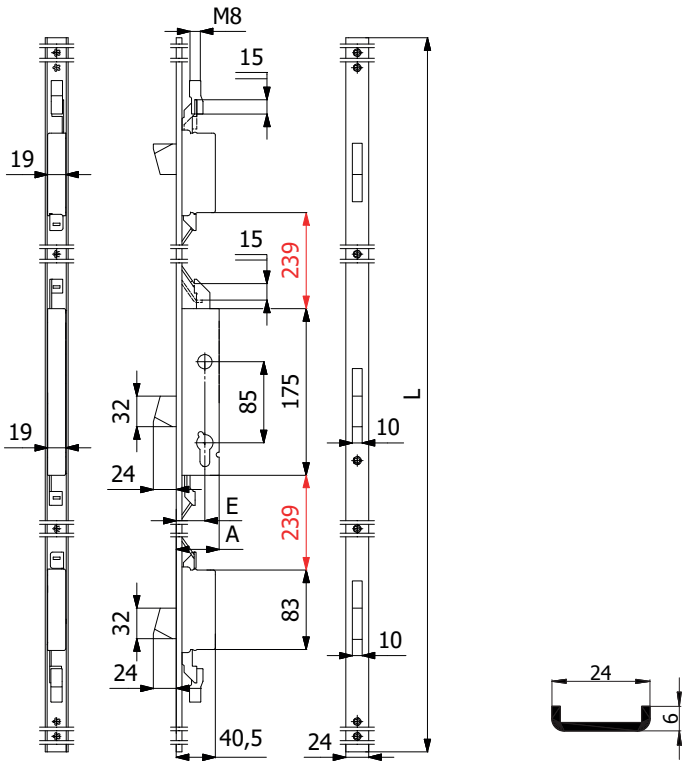

CONSTRUCTIVE FEATURES:

Zinc and plastic plated steel cases and covers - Nickel-plated special alloy self-centering dead bolts with lock-picking system.

WORKING:

Key driven dead bolts.

HAND:

No hand.

PROVIDED WITH:

2 roses cod. 0120 N, 2 forend spacers cod. 0633 N, cylinder screw, stainless steel fixing screws.

COD.	E	L	A	*Forend*	Throws	kg		
1541.25.UC.M8	25	1570	40	Stainless steel	1	1,94	-	6
1541.30.UC.M8	30	1570	45		1	1,97	-	6
1541.35.UC.M8	35	1570	50		1	2,00	-	6

3 DEAD BOLTS AND ADJUSTABLE LATCH BOLT 5 LOCKING POINTS

PROVIDED WITH M8 DEVICES

Latch bolt interchangeable with roller bolt cod. 01435

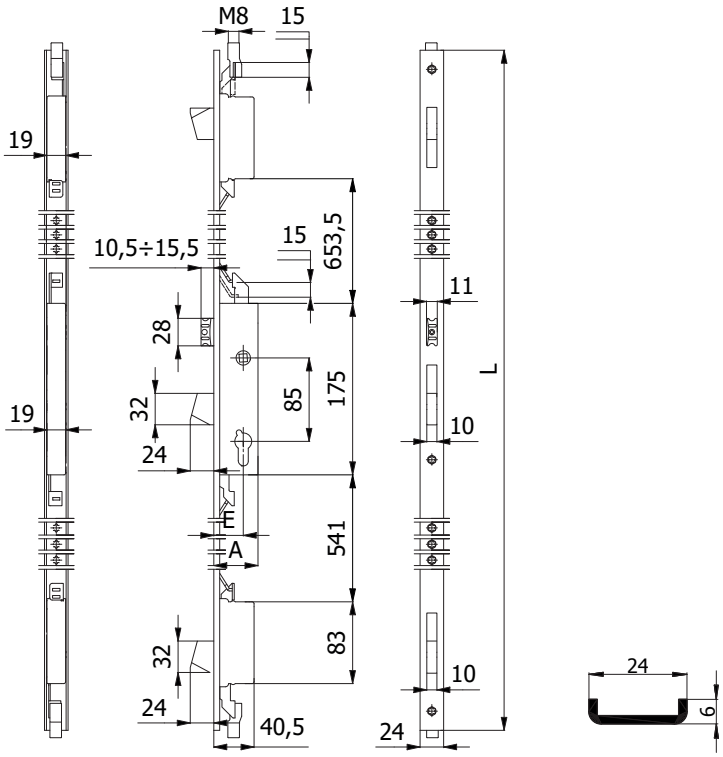

CONSTRUCTIVE FEATURES:

Zinc and plastic plated steel cases and covers - Nickel-plated special alloy self-centering dead bolts with lock-picking system - Nickel-plated special alloy anti-noise latch bolt - Zinc-plated special alloy square spindle device ⌀ 8 mm.

WORKING:

Key driven dead bolts - Handle or key driven latch bolt.

HAND:

Reversible.

PROVIDED WITH:

2 roses cod. 0120 N, 2 forend spacers cod. 0633 N, cylinder screw, stainless steel fixing screws.

COD.	E	L	A	Forend	Throws	kg		
1500.25.UL.M8	25	2300	40	Stainless steel	1	2,34	1	5
1500.30.UL.M8	30	2300	45		1	2,37	1	5
1500.35.UL.M8	35	2300	50		1	2,40	1	5

3 DEAD BOLTS 5 LOCKING POINTS
PROVIDED WITH M8 DEVICES

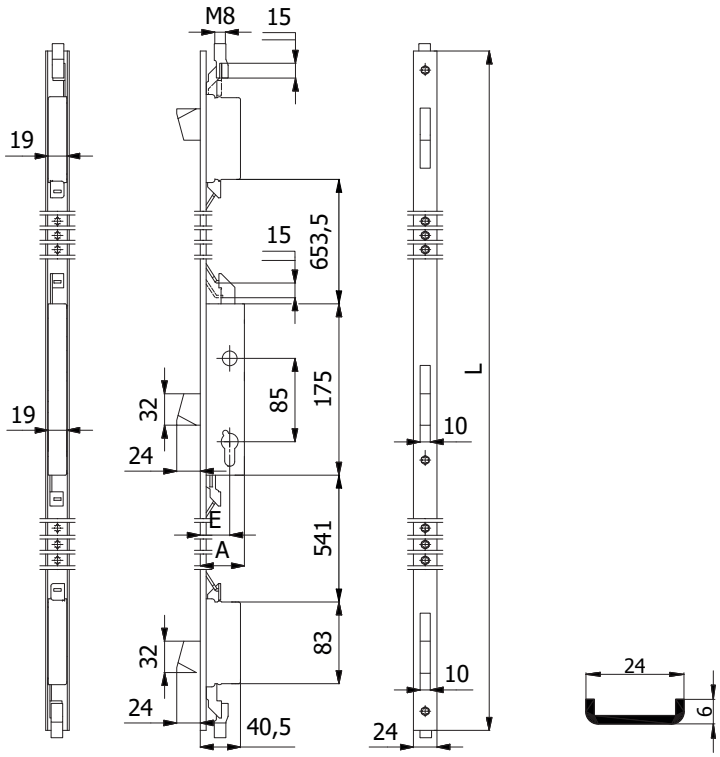

CONSTRUCTIVE FEATURES:
Zinc and plastic plated steel cases and covers - Nickel-plated special alloy self-centering dead bolts with lock-picking system.

WORKING:
Key driven dead bolts.

HAND:
No hand.

PROVIDED WITH:
2 roses cod. 0120 N, 2 forend spacers cod. 0633 N, cylinder screw, stainless steel fixing screws.

COD.	E	L	A	Forend	Throws	kg		
1501.25.UL.M8	25	2300	40	Stainless steel	1	2,27	1	5
1501.30.UL.M8	30	2300	45		1	2,30	1	5
1501.35.UL.M8	35	2300	50		1	2,33	1	5

MULTIPOINT LOCKS WITH GEAR MECHANISM MOVEMENTS

DESIGNED AND TESTED ACCORDING TO EUROPEAN STANDARD prEN 15685:2019

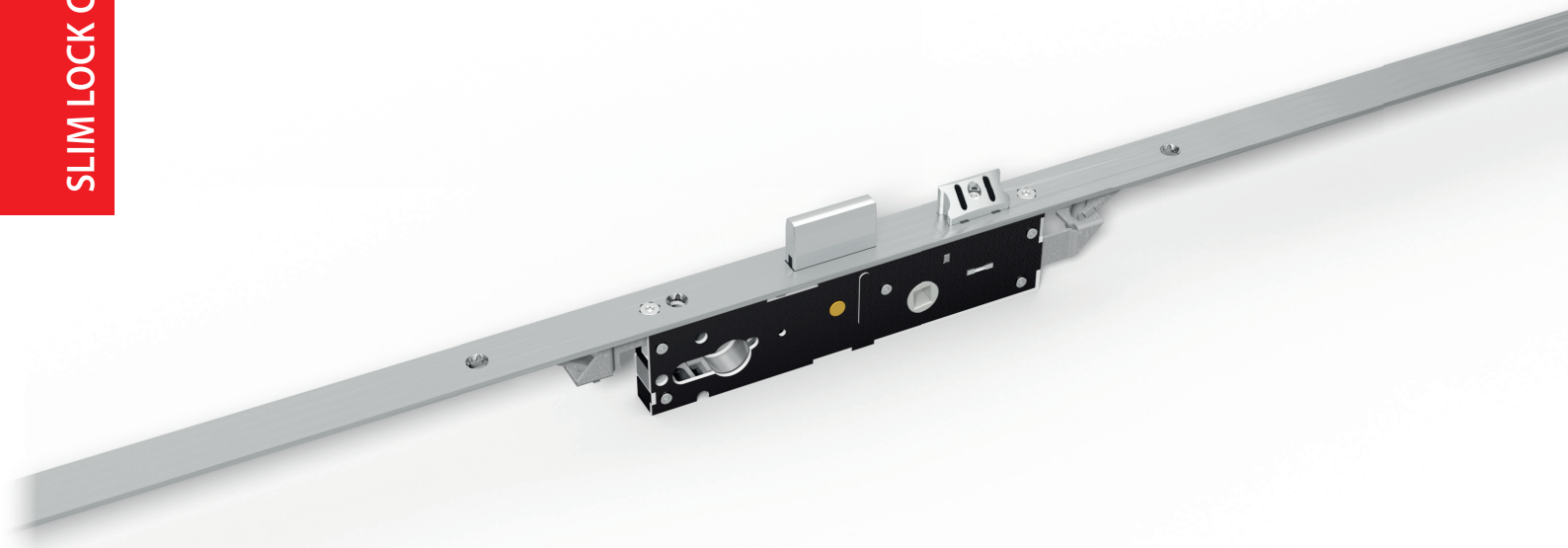

SECURITY

Self-centering advancing dead bolt with lock-picking system

Designed to be fitted with security escutcheon providing additional protection to the cylinder

Independent locking points: if one of the dead bolts is forced open, the others remain in closed position

Designed for additional locking points

MATERIALS

Stainless steel forend, rods and springs

Closed zinc and plated steel lock case to stop profile machining chips from entering the mechanism

SLIM LOCK CASE 15 mm

Ideal to minimizes the cut-outs on the profile

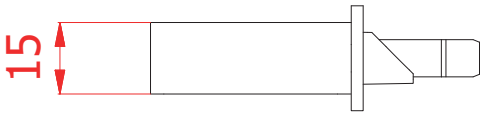

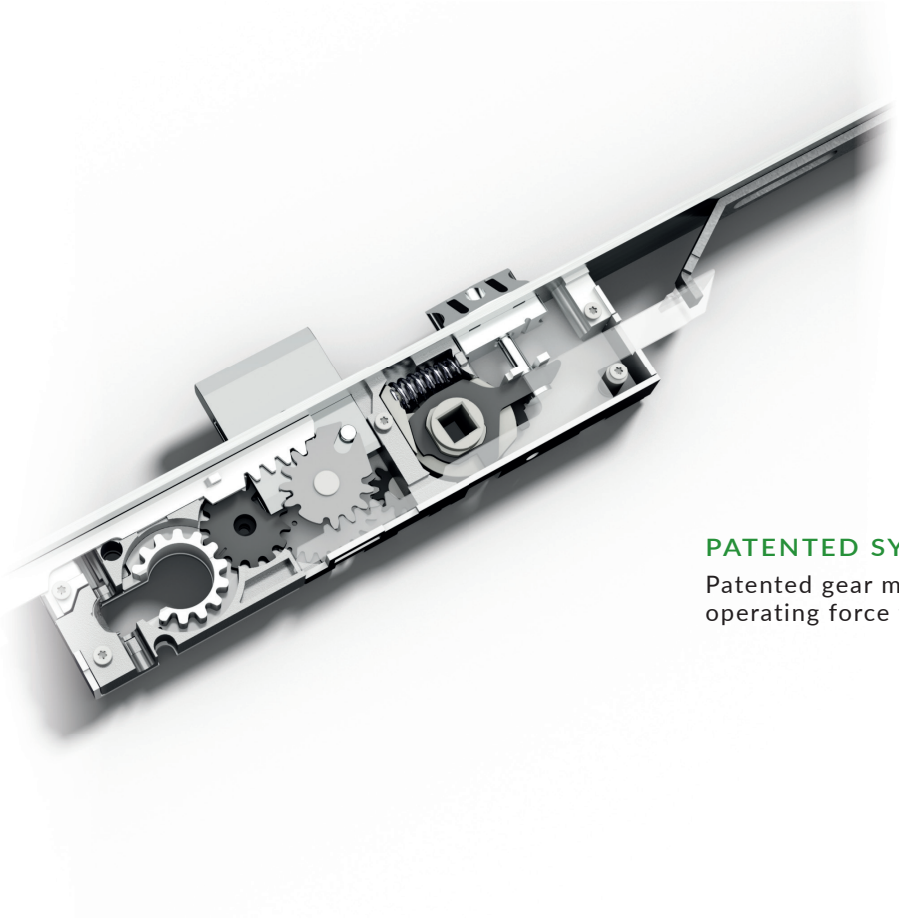

PATENTED SYSTEM

Patented gear mechanism movement that reduces the operating force to turn the key

WHEEL-CAM STOPPING DEVICE

Wheel-cam stopping device in case the cylinder is not present into the housing of the lock

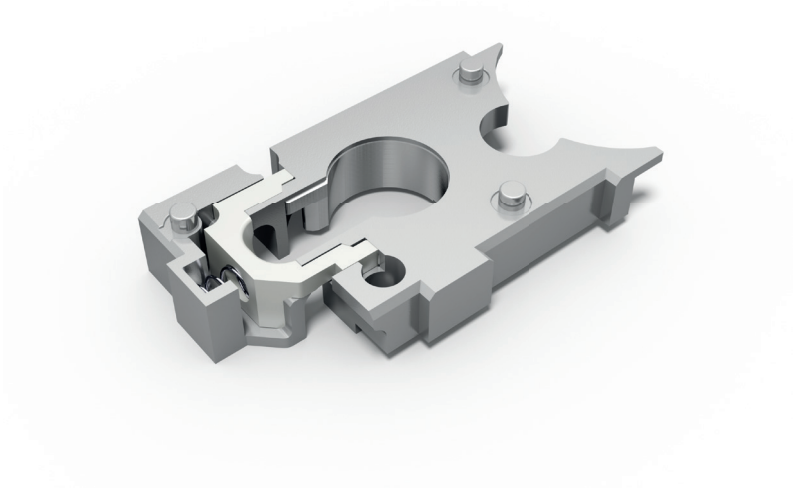

MULTIPOINT LOCKS WITH GEAR MECHANISM MOVEMENTS

series 1700S

2 DEAD BOLTS 4 LOCKING POINTS

PROVIDED WITH M8 DEVICES

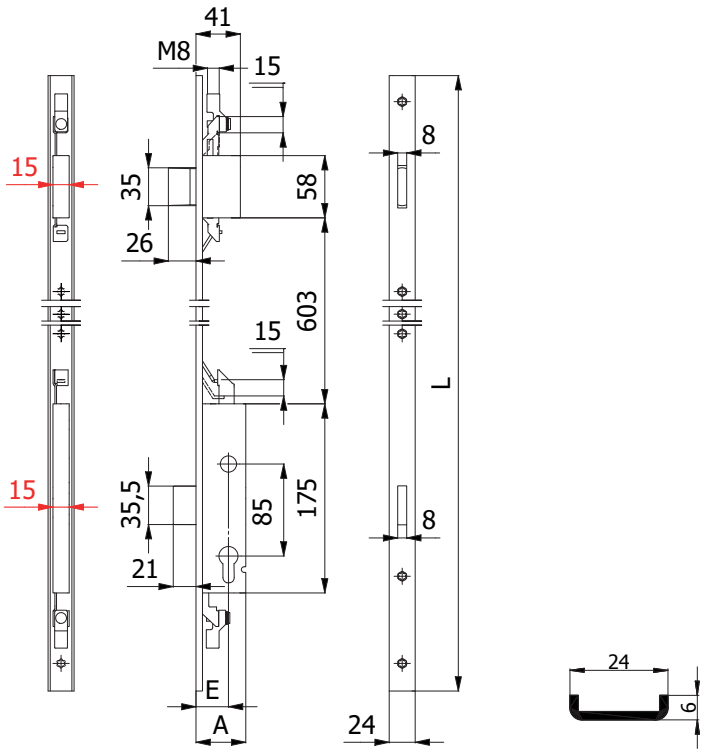

CONSTRUCTIVE FEATURES:

Zinc and plastic plated steel cases and covers - Nickel-plated special alloy self-centering dead bolts with lock-picking system.

WORKING:

Key driven dead bolts.

HAND:

Reversible.

PROVIDED WITH:

2 roses cod. 0120 N, 2 forend spacers cod. 0633 N, cylinder screw, stainless steel fixing screws, assembling instructions.

COD.	E	L	A	Forend	Throws	kg		
1731S.25.UC.M8	25	1000	41	Stainless steel	1	1,80	-	5
1731S.30.UC.M8	30	1000	46		1	1,84	-	5
1731S.35.UC.M8	35	1000	51		1	1,88	-	5
1731S.40.UC.M8	40	1000	56		1	1,92	-	5

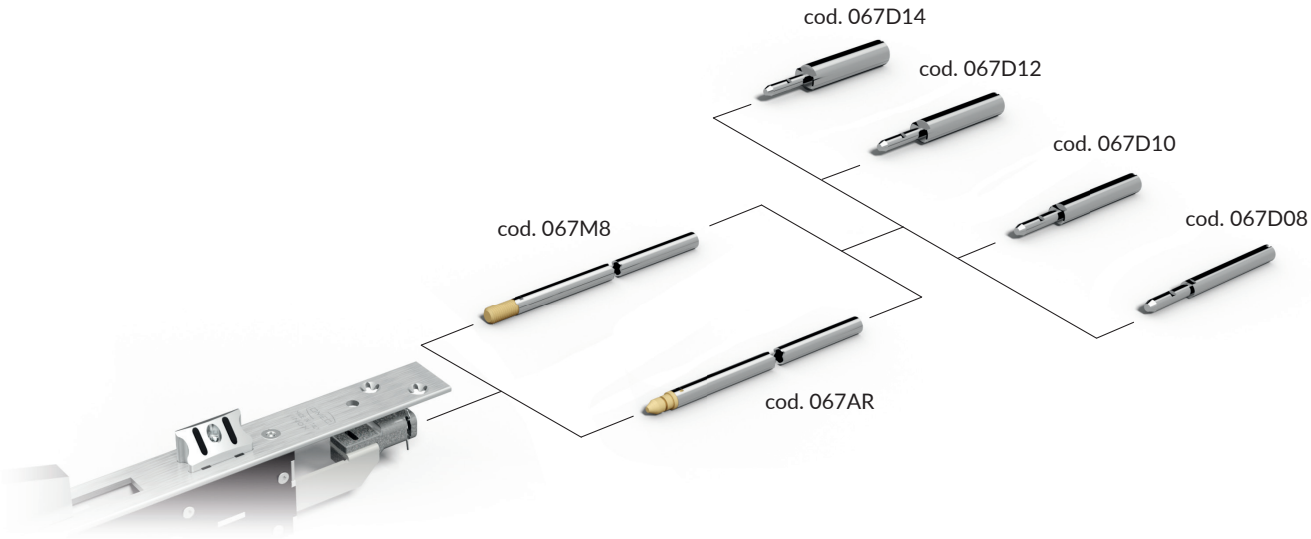

	COD.	Description	D	kg	
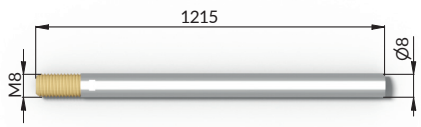	**067M8**	Zinc-plated steel internal rod with M8 device	-	0,196	50
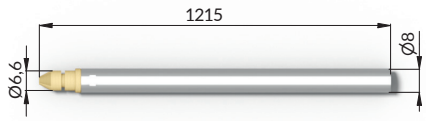	**067AR**	Zinc-plated steel internal rod with fast connection (AR)	-	0,196	50
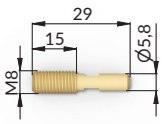	**067VTS**	Brass screw for internal rods 0678M8	-	0,008	100
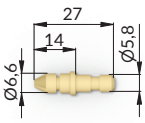	**067PRS**	Brass pin for internal rods 0678M8	-	0,008	100
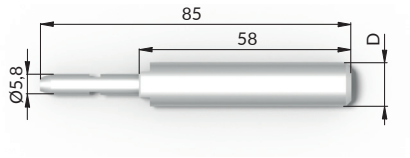	**067D08**	Hardened zinc-plated steel saw-resistant tip	8	0,027	50
	067D10		10	0,040	50
	067D12		12	0,054	50
	067D14		14	0,072	50